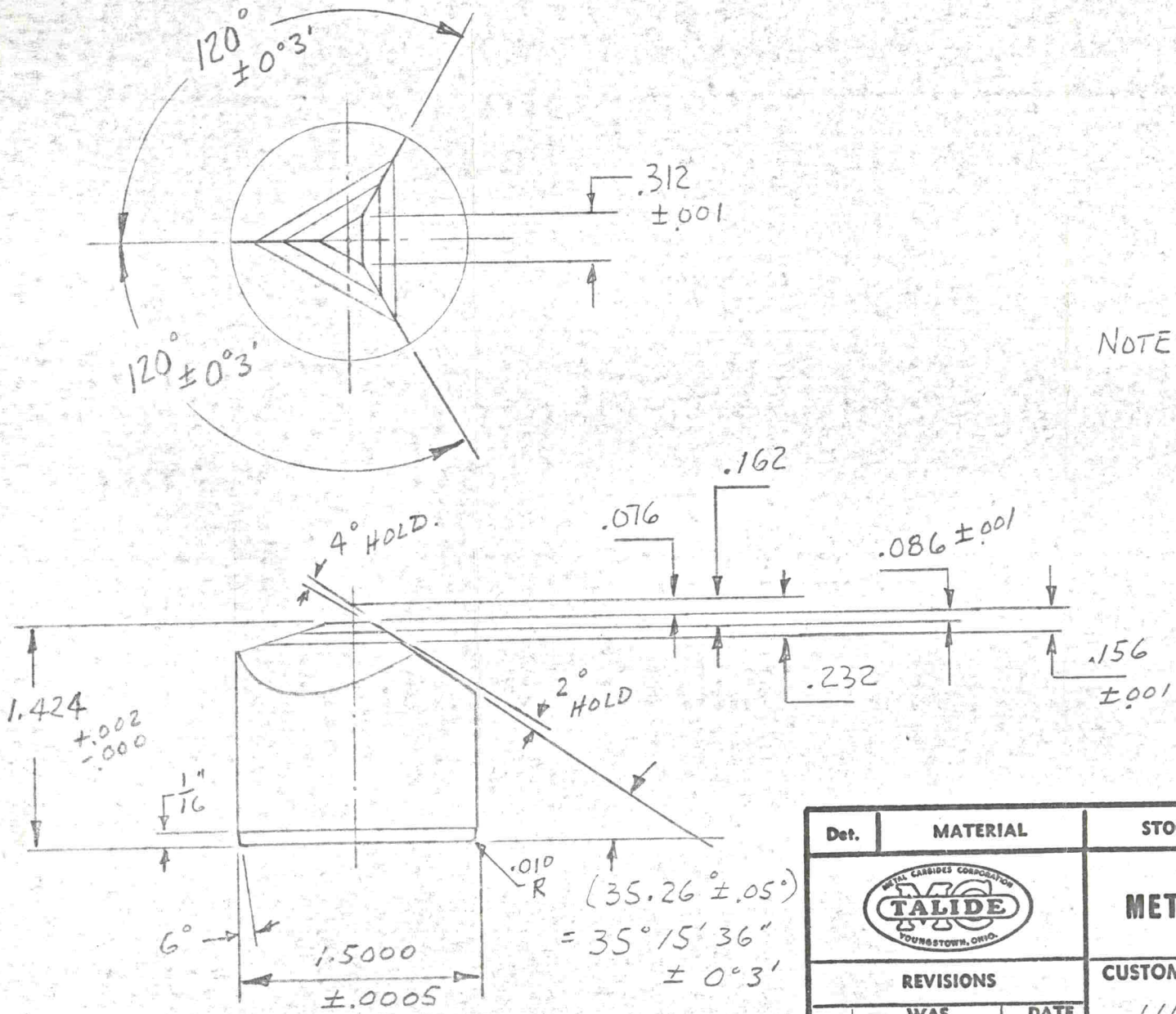

NOTE! 100 GRIT FINISH ALL OVER.

PER CUST SAMPLE REC'D 3/19/65
ALSO REFER TO M.C.C. DWG B-7640
(S.O. B-51103 R-714 (C-91) SAMPLE.

Det.	MATERIAL	STOCK SIZE	REMARKS	No. Req'd

METAL CARBIDES CORPORATION TALIDE YOUNGSTOWN, OHIO

ENGINEERING DEPARTMENT
METAL CARBIDES CORPORATION
YOUNGSTOWN, OHIO

REVISIONS

	WAS	DATE
A		
B		
C		
D		
E		

CUSTOMER BRIGHAM YOUNG UNIVERSITY

ITEM SOLID TALIDE ∈ TETRAHEDRAL ANVILS.

Date	Drawn	Scale	Print No.
3/22/65	C.R.	FULL	A-8094

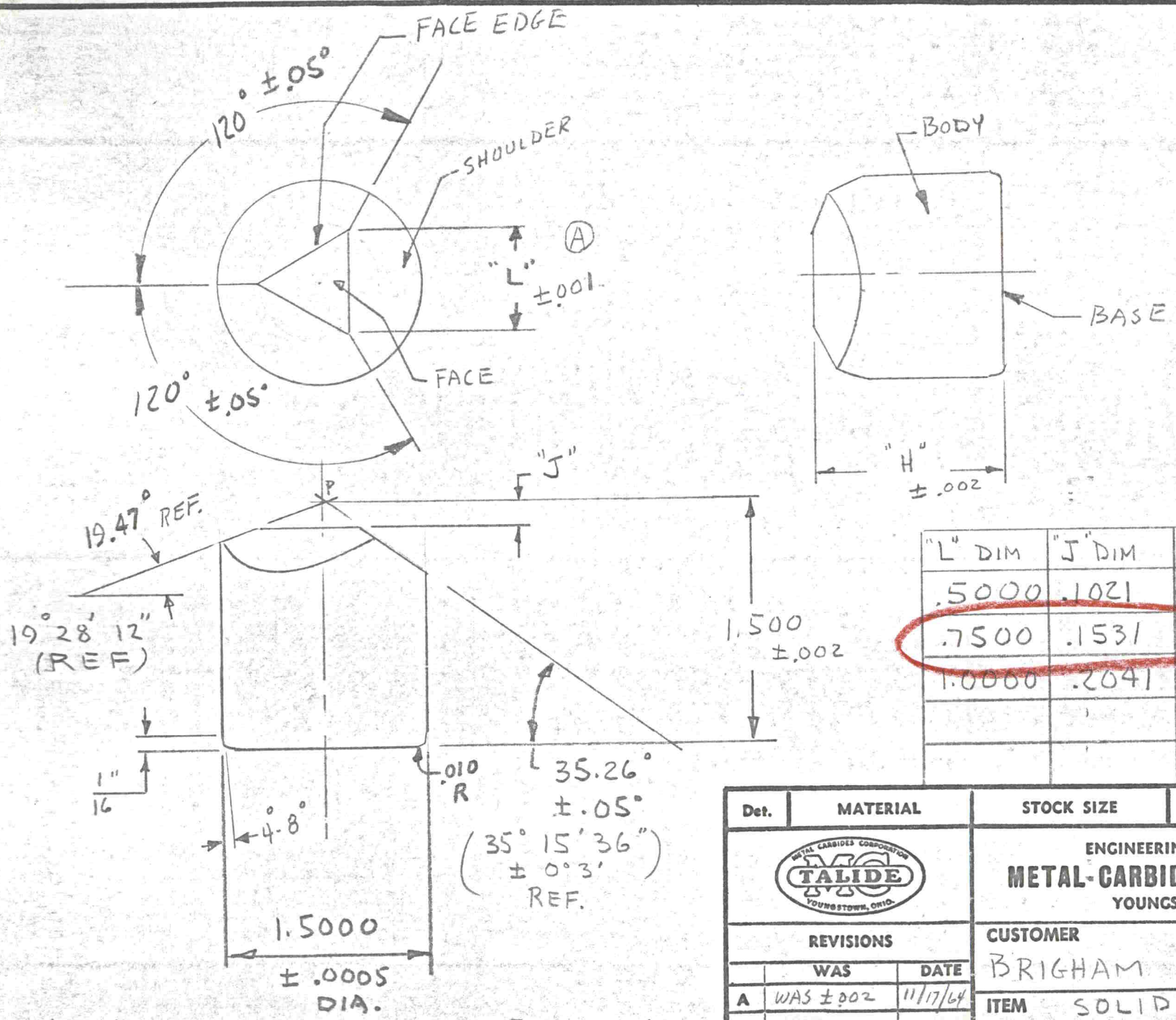

"L" DIM	"J" DIM	"H" DIM	
.5000	.1021	1.3979	
.7500	.1531	1.3469	
1.0000	.2041	1.2959	

NOTE: ALL SURFACES TO BE 100 GRIT.
PER. H. T. HALL DWG OF 9/19/62

Det.	MATERIAL	STOCK SIZE	REMARKS	No. Req'd

METAL CARBIDES CORPORATION TALIDE YOUNGSTOWN, OHIO

ENGINEERING DEPARTMENT
METAL-CARBIDES CORPORATION
YOUNGSTOWN, OHIO

REVISIONS

	WAS	DATE
A	WAS ±.002	11/17/64
B		
C		
D		
E		

CUSTOMER: BRIGHAM YOUNG

ITEM: SOLID TETRAHEDRAL ANVILS

Date	Drawn	Scale	Print No.
1/9/64	C.R	—	A-7866

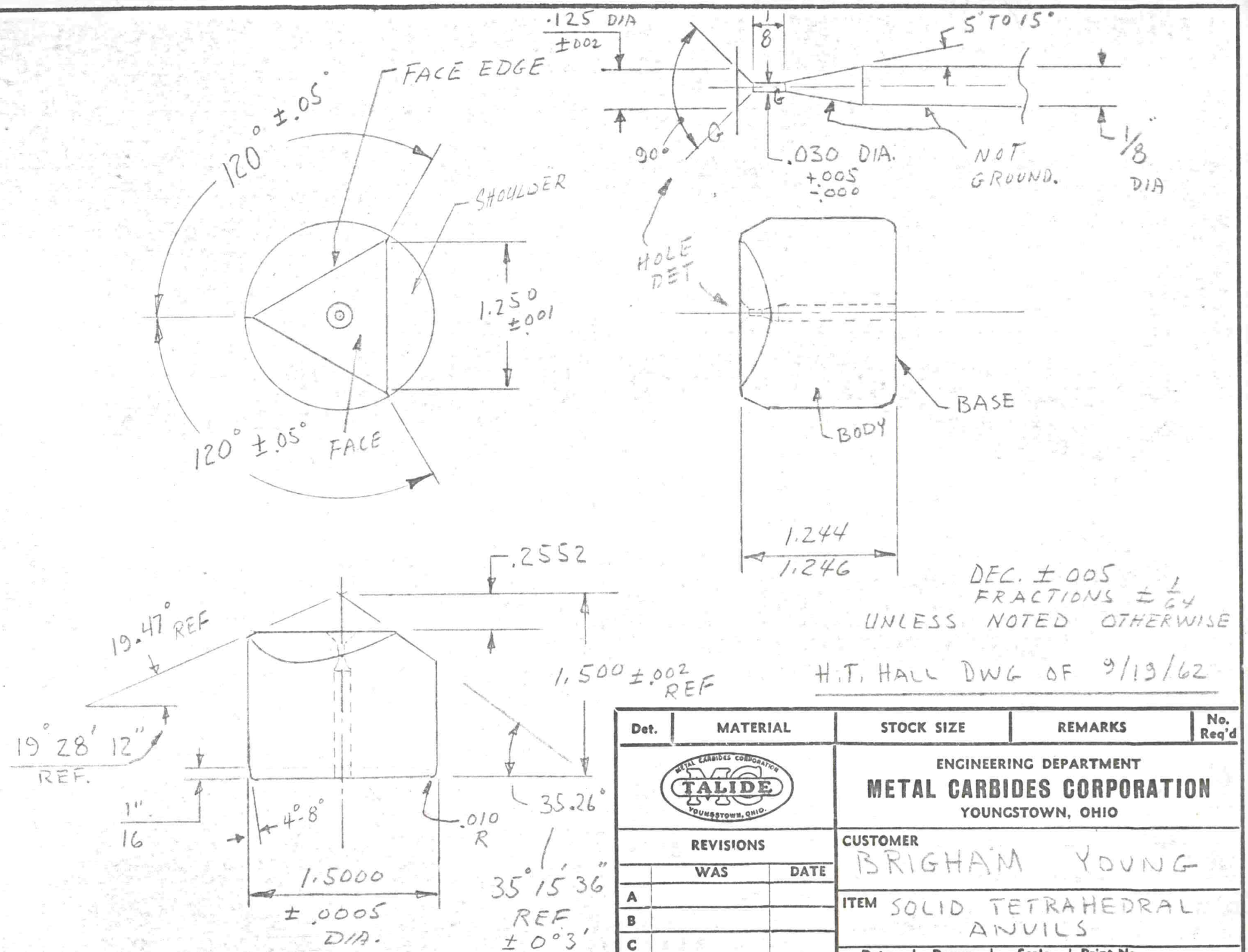

DEC. ± .005
FRACTIONS ± 1/64
UNLESS NOTED OTHERWISE

H.T. HALL DWG OF 9/19/62

Det.	MATERIAL	STOCK SIZE	REMARKS	No. Req'd

METAL CARBIDES CORPORATION TALIDE YOUNGSTOWN, OHIO

ENGINEERING DEPARTMENT
METAL CARBIDES CORPORATION
YOUNGSTOWN, OHIO

REVISIONS

	WAS	DATE
A		
B		
C		
D		
E		

CUSTOMER BRIGHAM YOUNG

ITEM SOLID TETRAHEDRAL ANVILS

Date	Drawn	Scale	Print No.
4/1/65	C.R	FULL & 2:1	A-8101